Model No. JR3061T RECIPRO SAW

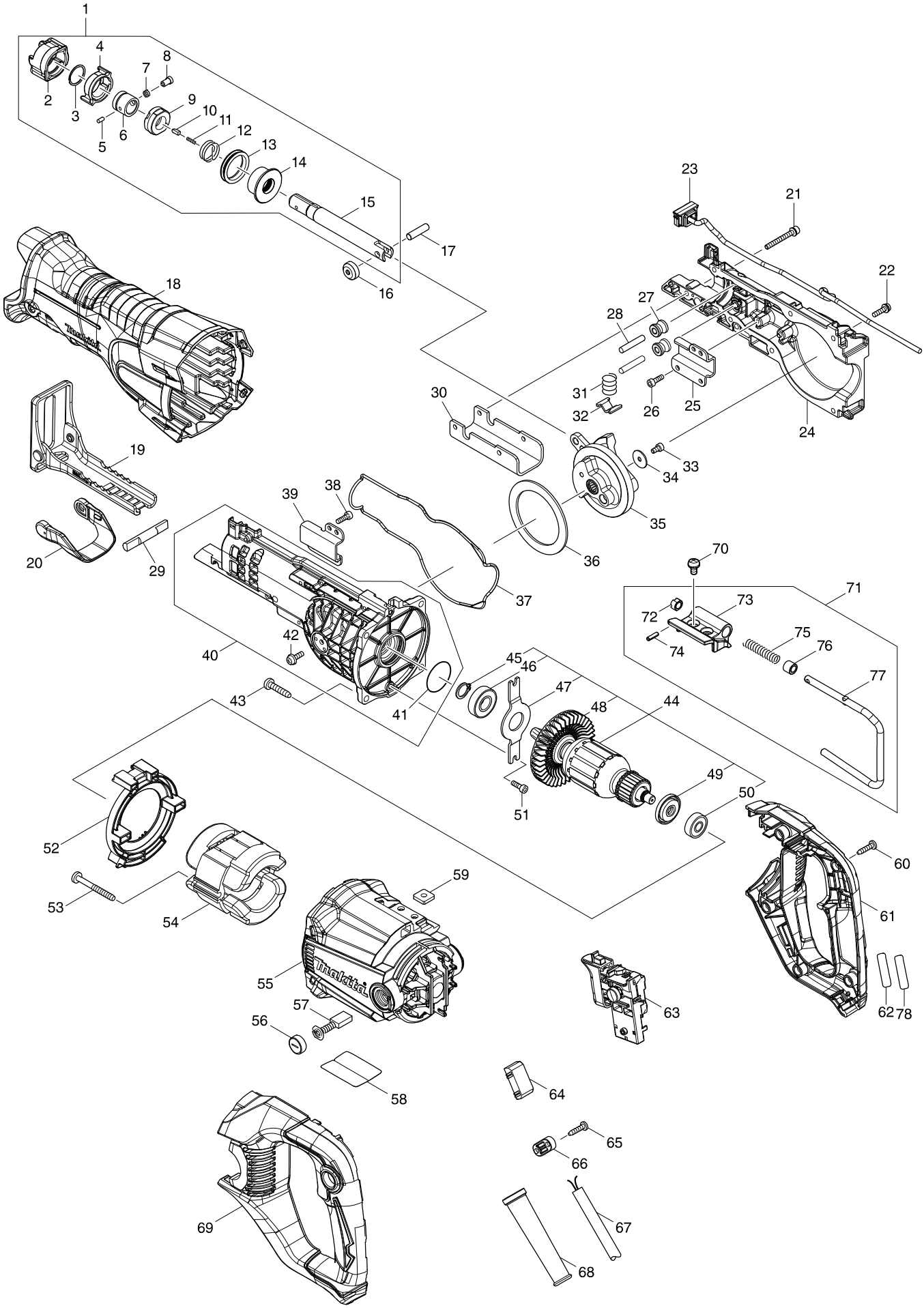

Model No. JR3061T RECIPRO SAW

Item	Parts No.	Description	I/C	Qty	N/O	Opt. 1	Opt. 2	Note
001	127053-5	SLIDER ASSEMBLY		1				
D10		INC. 2-15						
002	422223-4	PROTECTOR		1				
003	257952-8	RETAINING RING (EXT) 18		1				
004	310848-5	DRIVING SLEEVE		1				
005	268094-3	PIN 3		1				
006	331720-8	GUIDE SLEEVE		1				
007	234381-2	COMPRESSION SPRING 6		1				
008	256569-4	SHOULDER PIN 5		1				
009	458113-5	CONNECTING SLEEVE		1	*			
009-1	458968-8	CONNECTING SLEEVE	<	1				
010	310859-0	PUSH PIN		1	*			
010-1	310912-2	PUSH PIN	S	1				
011	233025-1	COMPRESSION SPRING 2		1	*			
011-1	232472-3	COMPRESSION SPRING 2	S	1				
012	233594-2	TORSION SPRING 17		1				
013	422309-4	RUBBER RING 25		1				
014	140C81-1	SEAL HOLDER COMPLETE		1				
015	327154-1	SLIDER		1				
016	310663-7	ROLLER		2				
017	268341-2	PIN 6		1				
018	422308-6	INSULATION COVER		1				
019	161811-9	SHOE		1				
020	458644-4	LOCK LEVER		1				
021	266979-7	HEX.SOCKET HEAD BOLT M4X35 WR		2				
022	911128-8	P.H.SCREW M4X16 WITH WR		5				
023	620965-6	LED CIRCUIT		1				
024	140C80-3	GEAR HOUSING R COMPLETE		1	*			
024-1	127139-5	GEAR HOUSING R ASSEMBLY	S	1				
025	346936-2	ROD GUIDE R		1	*			
026	922117-8	HEX. SOCKET HEAD BOLT M4X12		2	*			
027	327153-3	ROLLER F		2				
028	256579-1	PIN 5		2				
029	326599-0	LOCK PIN		1				
030	346937-0	SHOE GUIDE PLATE		1				
031	231231-2	COMPRESSION SPRING 12		1				
032	347415-3	SHOE LOCK PLATE		1				
033	265911-8	HEX. SOCKET HEAD BOLT M4X8		1				
034	267491-0	FLAT WASHER 4		1				
035	140C77-2	GEAR COMPLETE		1				
036	267490-2	FLAT WASHER 54		1				
037	422307-8	SEAL RING		1				
038	922117-8	HEX. SOCKET HEAD BOLT M4X12		2	*			
039	346935-4	ROD GUIDE L		1	*			
040	127052-7	GEAR HOUSING L ASSEMBLY		1	*			
D10		INC. 41,42			*			
040-1	127140-0	GEAR HOUSING L ASSEMBLY	S	1				
D10		INC. 41,42						

Model No. JR3061T RECIPRO SAW

Item	Parts No.	Description	I/C	Qty	N/O	Opt. 1	Opt. 2	Note
041	213437-4	O RING 28		1				
042	911511-9	PAN HEAD SCREW M4X10		1				
043	266459-3	TAPPING SCREW 5X25		4				
044	517979-3	ARMATURE ASS'Y 240V		1				
D10		INC. 45-50						
045	961052-5	RETAINING RING S-12		1				
046	211131-2	BALL BEARING 6001DDW		1				
047	285033-8	BEARING RETAINER 81		1				
048	241863-7	FAN 70		1				
049	681644-1	INSULATION WASHER		1				
050	210029-0	BALL BEARING 608ZZ		1				
051	265353-6	HEX. SOCKET HEAD BOLT M4X12		2				
052	458643-6	BAFFLE PLATE		1				
053	266466-6	TAPPING SCREW 5X45		2				
054	521879-1	FIELD ASS'Y 240V		1				
C10	654020-2	RING TERMINAL		2				
C20	654501-6	CONNECTOR P-1.25		2				
055	140C78-0	MOTOR HOUSING COMPLETE		1				
056	643750-0	BRUSH HOLDER CAP 7-11		2				
057	191963-2	CARBON BRUSH CB-303		1				
058	854V54-9	JR3061T NAME PLATE		1				
059	264002-2	SQUARE NUT M5		2				
060	266326-2	TAPPING SCREW 4X18		5				
061	183K39-5	HANDLE SET		1				
D10		INC. 69						
062	854V59-9	JR3061T SERIAL NO. LABEL		1				
063	651374-8	SWITCH C3VT-2L-C-H50		1				
064	620967-2	POWER SUPPLY CIRCUIT		1				
065	266326-2	TAPPING SCREW 4X18		2				
066	687124-5	STRAIN RELIEF		1				
067	665890-4	POWER SUPPLY CORD 1.0-2-4.0		1				
068	682574-9	CORD GUARD 10-90		1				
069	183K39-5	HANDLE SET		1				
D10		INC. 61						
070	911206-4	PAN HEAD SCREW M5X10		2				
071	126939-0	HOOK ASSEMBLY		1				
D10		INC. 72-77						
072	310661-1	LOCK SLEEVE		1				
073	319729-0	JOINT		1				
074	951057-3	SPRING PIN 3-12		1				
075	233455-6	COMPRESSION SPRING 7		1				
076	262561-0	SLEEVE 6		1				
077	281020-5	HOOK		1				
078	807G78-4	CLEAR LABEL		1				
A01	821718-8	PLASTIC CASE		1				
C10	162315-4	LATCH		1				
A02	B-05038	RECIPRO SAW BLADE FOR METAL		1				
A03	B-05044	RECIPRO SAW BLADE FOR PLYWOOD		1				

Model No. JR3061T RECIPRO SAW

Item	Parts No.	Description	I/C	Qty	N/O	Opt. 1	Opt. 2	Note
A04	B-05153	RECIPRO SAW BLADE FOR WOOD		1				

Please order the parts with a part number.

Print Date 12/12/2018